| GEN. TOLERANCES | 0.5 - 6 | ±0.1 | 6 - 30 | ±0.2 | 30 - 120 | ±0.3 | 120 - 315 | ±0.5 | 315 - 1000 | ±0.8 | 1000 - 2000 | ±1.2 | 2000 - 4000 | ±2 | 4000 - 8000 | ±3 |
|---|---|---|---|---|---|---|---|---|---|---|---|---|---|---|---|---|
| GEN. MACHINING | 0.4 | | 1.6 | | 3.2 | | 6.3 | | 12.6 | | 25 ROUGH | | | | | |

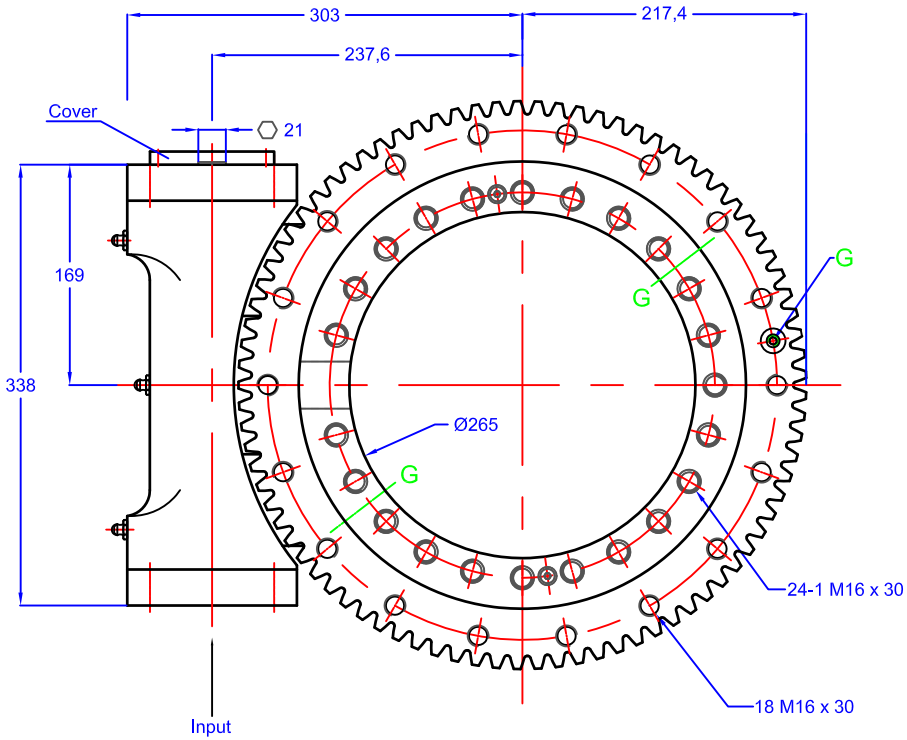


| WGS 14 Slewing Drive Performance Data | | |
|---|---|---|
| Rated Output Speed | < 2.5 rpm | |
| Output Torque（Max.） | 8 kN.m | 5900 lbf.ft |
| Tilting Moment Torque （Max.） | 67.8 kN.m | $50\times10^3$ lbf.ft |
| Holding Torque | 48 kN.m | $35\times10^3$ lbf.ft |
| Axial Load （Max.） | 555 kN | $125\times10^3$ lbf |
| Radial Load （Max.） | 222 kN | $50\times10^3$ lbf |
| Ratio of Worm Gear | 85:1 | |
| Tracking Precision | ≤ 0.17 ° | |

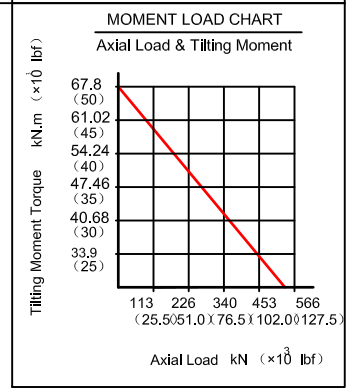


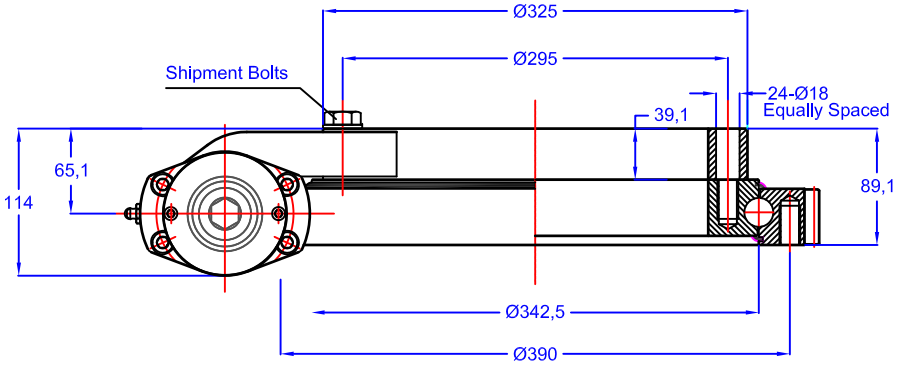


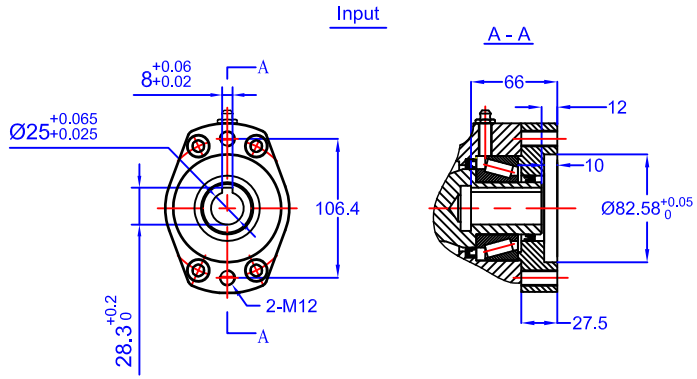


| GEAR DATA | SPUR | WORM | HELICAL |
|---|---|---|---|
| WORM GEAR RATIO | 85:1 | | |
| OUTPUT TORQUE | 8 KNm | | |
| HOLDBACK TORQUE | 67.8 KNm | | |
| RATED OUTPUT SPEED | < 2.5 rpm | | |
| TRACKING PRECISION | =< 0.17° | | |
| MAXIMUM LOADS | | | |
| MAXIMUM MOMENT LOAD | | | |

*Designed in accordance with designated QCB SLEWING RING STANDARDS*
*Non toleranced dimensions to ISO 2768-1 m*
*All burrs and sharp edges to be removed; Standard corner chamfer 1mm x 45°*
*Internal radial and axial clearance figures to QCB standard 2014 or revisions thereof*
*The HARDNESS GAP is to be indicated by stamped letter R or a PAINT mark on the exterior surface*
*The high point of gear eccentricity to be indicated by GREEN or BLUE paint on 3 teeth*

BOLT DATA

| | | | | | |
|---|---|---|---|---|---|
| INNER | 24-1 = | MOUNTING HOLES | M16 CS18 | TURNING TORQUE | |
| OUTER | 18 = | MOUNTING HOLES | M16 | MATERIAL | |
| GREASE HOLES | 'G' | | $\frac{1}{8}$"x27 NPT | WEIGHT | 47 kg |
| LOADING PLUG | 'FS' | SOFT ZONE | 'R' | DEPTH OF HARDENING (55-60HRc) | mm |
| | | SEAL SIZE | TBA | | |

| | |
|---|---|
| AXIAL PLAY | |
| RADIAL PLAY | |

© NBC GROUP LTD. NOT TO BE COPIED WITHOUT PERMISSION

| REV | DATE | MODIFICATION | REVISED BY |
|---|---|---|---|
| A | | | |

QCB Bearings — SLEWING RINGS & DRIVES

*imported by NBC Group Ltd*
Orleton Lane, Wellington, Telford, TF1 2BG, UK
P: 01952 222300 F: 01952 242938
www.nbcgroup.co.uk

*QCB® is a registered trademark of NBC Group Ltd*

QCB or NBC DRAWING NUMBER

# WGS 14 85 25 H R

| | |
|---|---|
| DRAWN: | LJM |
| DATE: | 12/07/2016 |
| CHECKED: | LJM |

QCB RS 11/2016