GEN. TOLERANCES		0.5 - 6	±0.1	6 - 30	±0.2	30 - 120	±0.3	120 - 315	±0.5	315 - 1000	±0.8	1000 - 2000	±1.2	2000 - 4000	±2	4000 - 8000	±3
GEN. MACHINING	√	0.4	√	1.6	√	3.2	√	6.3	√	12.6	√	25 ROUGH	√		√		

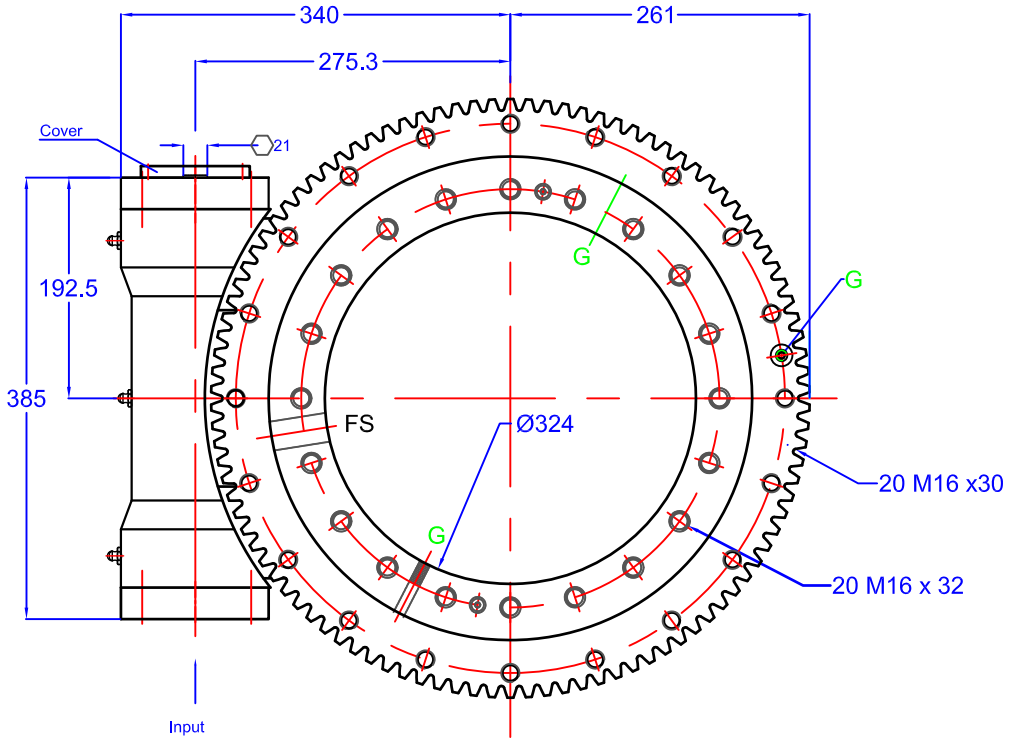

WGS 17 Slewing Drive Performance Data		
Rated Output Speed	< 2.5 rpm	
Output Torque（Max.）	10 kN.m	7400 lbf.ft
Tilting Moment Torque （Max.）	135.6 kN.m	100×10^3 lbf.ft
Holding Torque	72.3 kN.m	53×10^3 lbf.ft
Axial Load （Max.）	970 kN	218×10^3 lbf
Radial Load （Max.）	390 kN	88×10^3 lbf
Ratio of Worm Gear	102:1	
Tracking Precision	≤ 0.15 °	

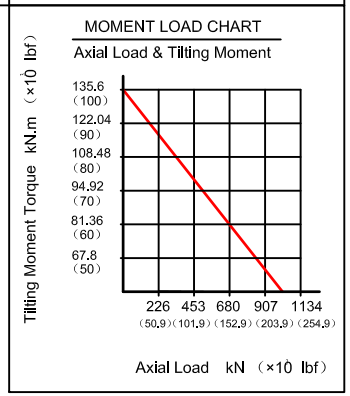

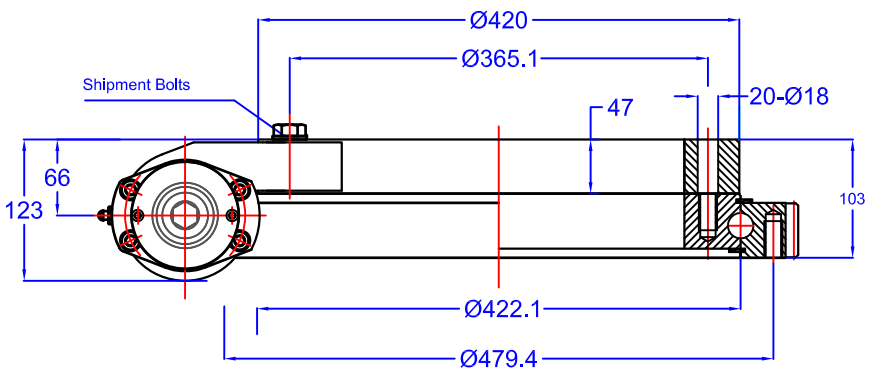

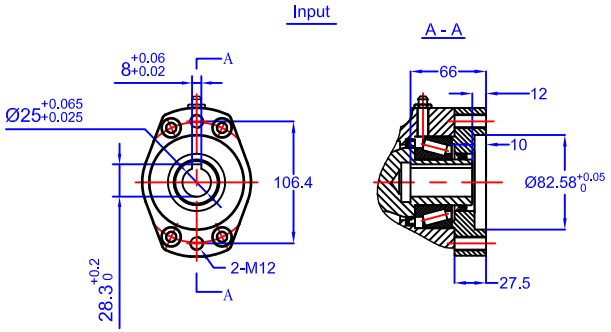

GEAR DATA	SPUR	**WORM**	HELICAL
WORM GEAR RATIO	102:1		
OUTPUT TORQUE	10 KNm		
HOLDBACK TORQUE	135.6 KNm		
RATED OUTPUT SPEED	< 2.5 rpm		
TRACKING PRECISION	=< 0.15°		
MAXIMUM LOADS			
MAXIMUM MOMENT LOAD			

Designed in accordance with designated QCB SLEWING RING STANDARDS
Non toleranced dimensions to ISO 2768-1 m
All burrs and sharp edges to be removed; Standard corner chamfer 1mm x 45°
Internal radial and axial clearance figures to QCB standard 2014 or revisions thereof
The HARDNESS GAP is to be indicated by stamped letter R or a PAINT mark on the exterior surface
The high point of gear eccentricity to be indicated by GREEN or BLUE paint on 3 teeth

BOLT DATA

INNER	20 =	MOUNTING HOLES	M16 CS18	TURNING TORQUE	
OUTER	20 =	MOUNTING HOLES	M16	MATERIAL	
GREASE HOLES	'G'		$\frac{1}{8}$"x27 NPT	WEIGHT	87 kg
LOADING PLUG	'FS'	SOFT ZONE	'R'	DEPTH OF HARDENING (55-60HRc)	mm
		SEAL SIZE	TBA		

AXIAL PLAY			
RADIAL PLAY			

© NBC GROUP LTD. NOT TO BE COPIED WITHOUT PERMISSION

REV	DATE	MODIFICATION	REVISED BY
A			

QCB Bearings — SLEWING RINGS & DRIVES

imported by NBC Group Ltd
Orleton Lane, Wellington, Telford, TF1 2BG, UK
P: 01952 222300 F: 01952 242938
www.nbcgroup.co.uk

QCB® is a registered trademark of NBC Group Ltd

QCB or NBC DRAWING NUMBER

WGS 17 102 25 H R

DRAWN:	LJM
DATE:	12/07/2016
CHECKED:	LJM

QCB RS 11/2016